Granning Steer axle Manual

This manual states the requirements for installation and maintenance of the Steering Components of your Granning Steering axle, is an addendum to, and should be used in conjunction with, the service and installation manuals for Granning Axle specific brake ranges. These documents can be located at;

Information Centre - Granning Axles & Solutions

Whilst every effort has been made to ensure that this manual is as accurate as possible, Granning cannot be held responsible for any omissions or errors. We reserve the right to alter specification without prior notice.

Revision: December 2020

Granning are one of the Europe's primary Air Suspension and Axle Manufacturers.
We are experts in Axles and Suspensions for Commercial Road Vehicles, Agricultural Trailers and Quarrying and Mining Machinery. Operators throughout the world are reaping the benefits of our road friendly air suspensions, mechanical suspensions and high quality axles.
We hope you get many years of service from your Granning steering axle and in order to ensure you do, please follow the instructions contained in this manual.

Please record the below information as you may require it when identifying service components.

Axle information record:

Date Fitted:	/ /
Chassis Number:	
Axle Model Code:	/ /
Axle Serial Number:	

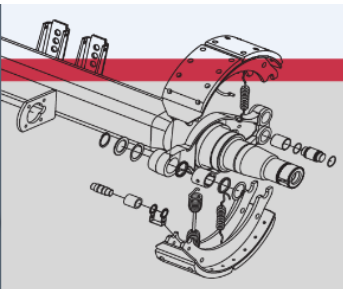

www.granningaxles.ie

Ireland
T. +353 (0) 45 897 553
F. +353 (0) 45 848 638

UK
T. +44 (0) 1925 817 689
F. +44 (0) 1925 817 153

NI
T. +44 (0) 2890 740 055
F. +44 (0) 2890 752 718

Poland
T. +48 (0) 29 753 1616
F. +48 (0) 29 753 1604

Contents

Health & Safety	3
Serial Badge Location	4
Steer Axle Installation	5
Maintenance Intervals	6, 26
Dismantling and re-assembly	7
Adjustments	16-21
Steer angle limiting	22-25
Torque settings	27
Hydraulic ram piping	28-32
Contact information	33

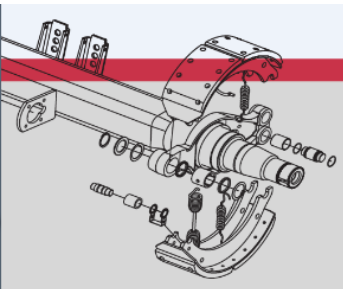

www.granningaxles.ie

Ireland
T. +353 (0) 45 897 553
F. +353 (0) 45 848 638

UK
T. +44 (0) 1925 817 689
F. +44 (0) 1925 817 153

NI
T. +44 (0) 2890 740 055
F. +44 (0) 2890 752 718

Poland
T. +48 (0) 29 753 1616
F. +48 (0) 29 753 1604

Health and Safety Guidelines

Do ✓

ALWAYS use genuine GRANNING components. ✓

ALWAYS use suitable tools for the job. ✓

ALWAYS work in good, safe working conditions. ✓

ALWAYS use safety equipment. ✓

Always follow your own Health and Safety systems. ✓

Don't ✗

NEVER work under an unproped body or axle. ✗

NEVER leave an un-propped body or axle unattended. ✗

NEVER work without supervision. ✗

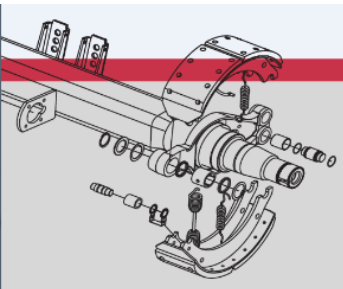

www.granningaxles.ie

Ireland
T. +353 (0) 45 897 553
F. +353 (0) 45 848 638

UK
T. +44 (0) 1925 817 689
F. +44 (0) 1925 817 153

NI
T. +44 (0) 2890 740 055
F. +44 (0) 2890 752 718

Poland
T. +48 (0) 29 753 1616
F. +48 (0) 29 753 1604

Location of the Axle Data Plate

The position of the identification plate is indicated below

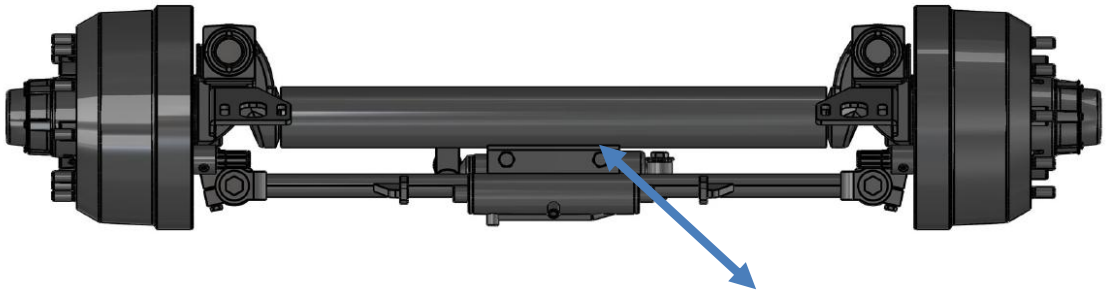

Axle Serial Badge Information

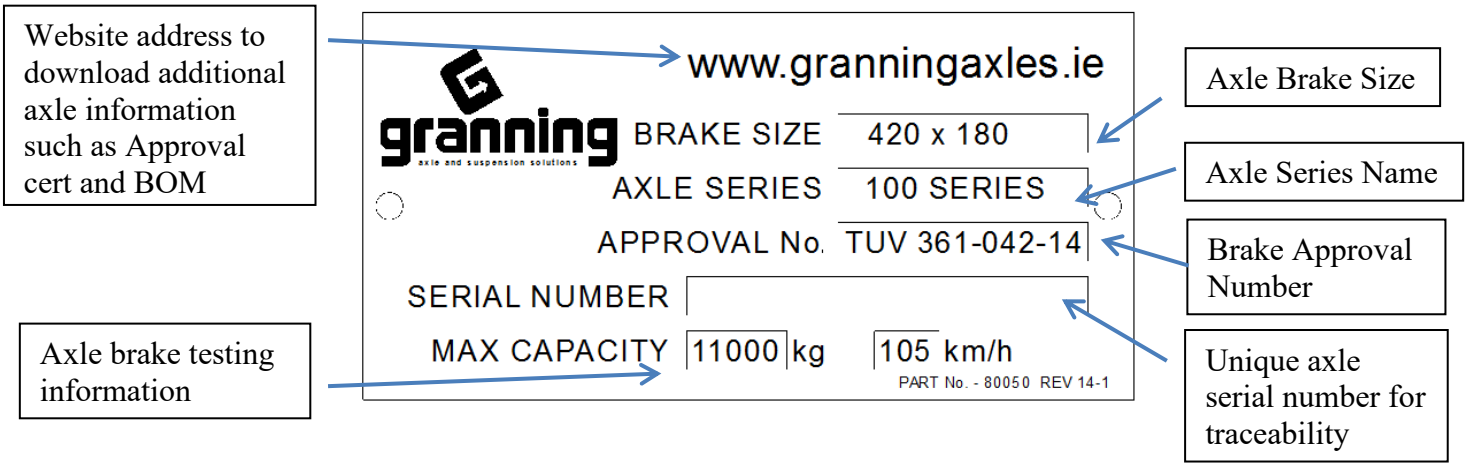

Product Statement

The self-steering axle is designed and manufactured for multiple-axle vehicles in order to give the following advantages:

- Reduce tyre wear.
- Prevent scrubbing of tyres during steering maneuvers.
- Protect road surfaces.
- Make it easier to steer the vehicle.
- Make steering more sensitive.
- Reduces the vehicle turning circle.
- Reduces fuel consumption

www.granningaxles.ie

Ireland
T. +353 (0) 45 897 553
F. +353 (0) 45 848 638

UK
T. +44 (0) 1925 817 689
F. +44 (0) 1925 817 153

NI
T. +44 (0) 2890 740 055
F. +44 (0) 2890 752 718

Poland
T. +48 (0) 29 753 1616
F. +48 (0) 29 753 1604

Important - Installing the Self-Steering Axle

In order for the self -steering axle to function correctly Self-steering axles must be installed at the correct orientation. The King Pins Must be located to the front of the axle tube, and be +/- 1 degree from vertical with the axle with the axle, in its "running" position, or "Ride Height". Deviation from this can compromise the self-steering effect, and can cause significant damage. See below diagrams.
860 series (406x120mm brake) is the exception. The 860 series kingpin needs to be fitted 9 degrees from the vertical.

For axle seat / saddle welding refer to the appropriate axle brake series installation manual.

Inclination of the King Pin

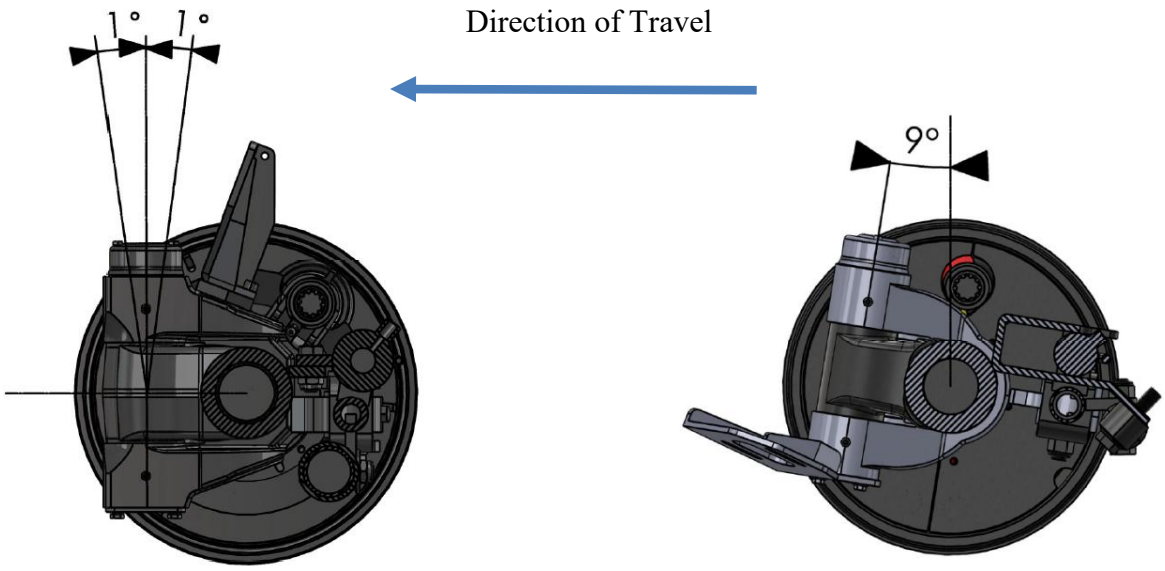

Standard Kingpin Angle

860 Kingpin Angle

Axle Periodic maintenance Intervals

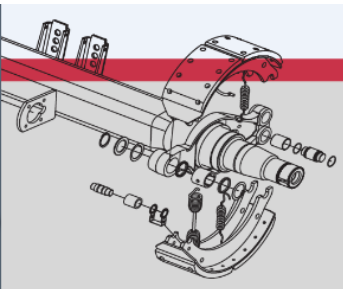

www.granningaxles.ie

Ireland
T. +353 (0) 45 897 553
F. +353 (0) 45 848 638

UK
T. +44 (0) 1925 817 689
F. +44 (0) 1925 817 153

NI
T. +44 (0) 2890 740 055
F. +44 (0) 2890 752 718

Poland
T. +48 (0) 29 753 1616
F. +48 (0) 29 753 1604

In order to achieve maximum performance from your Granning Self Steering Axle it requires regular servicing outlined below. Use in conjunction with Granning Axle brake series manual.

Service intervals depend on operating conditions and are best decided by the Operators Fleet Engineer. The following guidelines are for axles used for general road haulage. Records of this servicing should be kept for future reference.

Note: local legislative regulations should always be followed.

On Initial Receipt >
Record axle serial numbers. Check all bolts, nuts, etc. for recommended torque.

First 300 miles (500 km) >
Check all wheel nuts daily for first week, Check Torque of other nuts/bolts Check Toe-In

At 3,000 miles (5,000 km) >
Check same as first 300 miles (500 km). Check tyre wear

At 10,000 miles (15,000 km) and every **10,000 miles** thereafter >
Lubricate all grease points. Check Toe-In

At 30,000 miles (50,000 km) and every **30,000 miles** thereafter >
Check Bolt torques, geometric layout.

At 60,0000 miles (50,000 km) and every **60,000 miles** thereafter >
Check Toe-In, check geometric layout, check pin wear.

Dismantling and re-assembly of critical components

Replacement of the stub axle King Pin may require removal of the axle from the vehicle.
The sequence of procedures and the estimated stub axle pin disassembly and reassembly times, performed by trained personnel, are as follows:

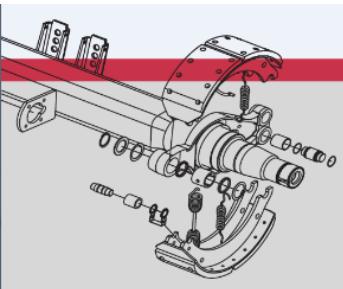

www.granningaxles.ie

Ireland
T. +353 (0) 45 897 553
F. +353 (0) 45 848 638

UK
T. +44 (0) 1925 817 689
F. +44 (0) 1925 817 153

NI
T. +44 (0) 2890 740 055
F. +44 (0) 2890 752 718

Poland
T. +48 (0) 29 753 1616
F. +48 (0) 29 753 1604

Description of procedure	Time in minutes
Axle dismantling	60’
Axle re-assembly	50’
Stub axle King Pin re-assembly	50’
Toe-in check and adjustment	30’
TOTAL PROCEDURE TIME	190’

Axle Removal

1. Check that the tie-rod locking cylinder is engaged. Otherwise activate the locking control.
2. Lift the rear of the vehicle until the wheels are slightly raised off the floor.
3. Place strong support props under the axle.
4. Loosen the wheel nuts.
5. Remove the wheels.
6. Uniformly lift the rear part of the vehicle.
7. Loosen the axle fastening U-bolts.
8. Remove the axle from the suspension arms.
9. Remove the track rod bolt from both sides, support the tracking rod when doing this. Once removed this allows the steer axle ends to swing freely.
10. To give more space and access the brake chamber and slack adjuster can be removed.
11. To make the diagrams clearer the steer axle is shown below with no hub and drum assembly.

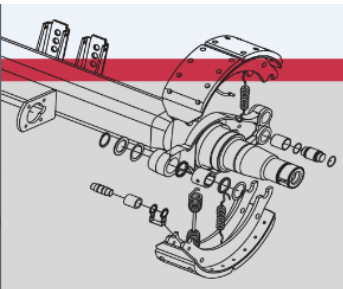

www.granningaxles.ie

Ireland
T. +353 (0) 45 897 553
F. +353 (0) 45 848 638

UK
T. +44 (0) 1925 817 689
F. +44 (0) 1925 817 153

NI
T. +44 (0) 2890 740 055
F. +44 (0) 2890 752 718

Poland
T. +48 (0) 29 753 1616
F. +48 (0) 29 753 1604

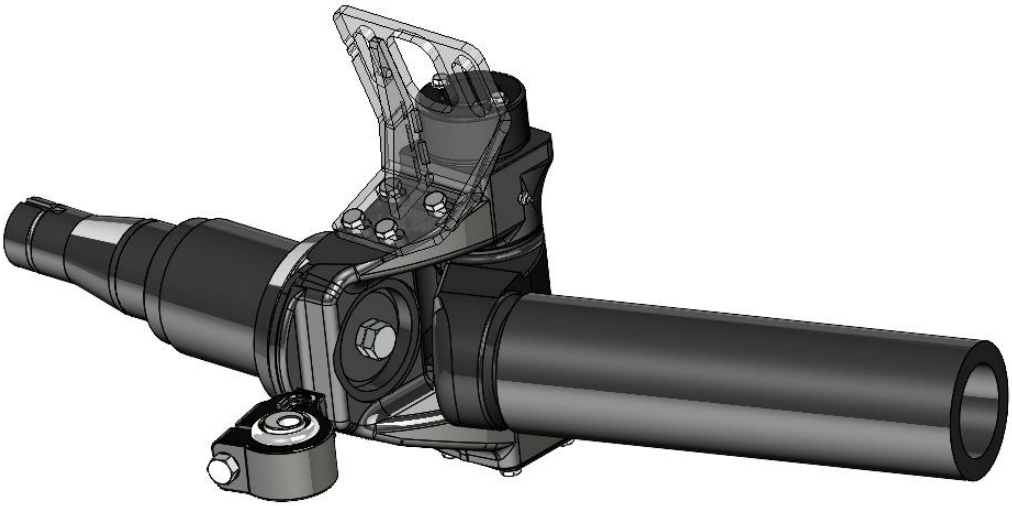

Axle King Pin removal

Remove the 2 bolts holding the top kingpin cover.
Remove the 4 bolts holding the bottom kingpin cover.

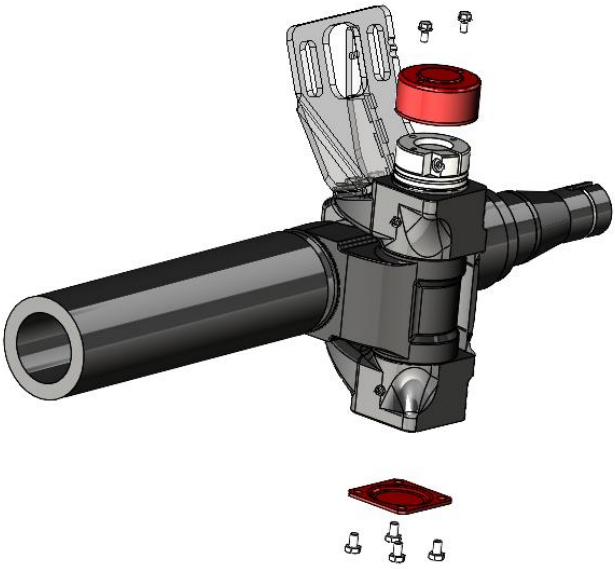

Loosen the adjustment ring pinch bolt, then remove the ring nut and washers.

www.granningaxles.ie

Ireland
T. +353 (0) 45 897 553
F. +353 (0) 45 848 638

UK
T. +44 (0) 1925 817 689
F. +44 (0) 1925 817 153

NI
T. +44 (0) 2890 740 055
F. +44 (0) 2890 752 718

Poland
T. +48 (0) 29 753 1616
F. +48 (0) 29 753 1604

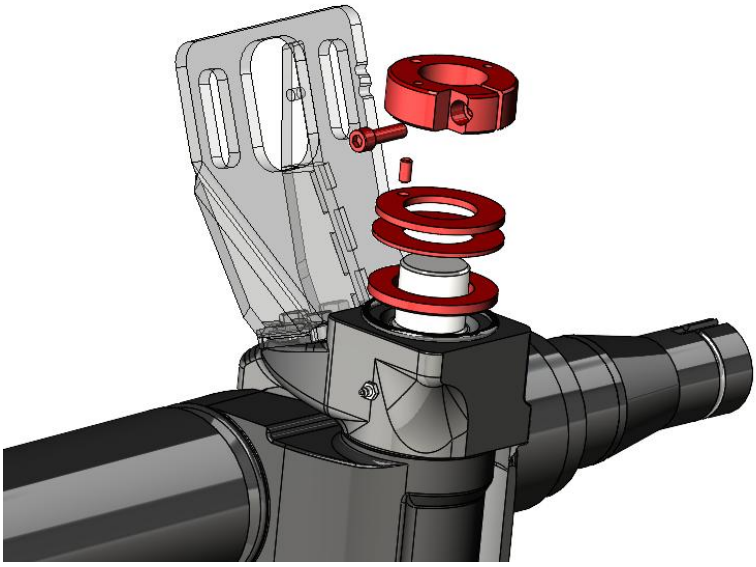

Use a hydraulic press or heavy mallet to extract out the pin as illustrated, inserting a soft piece of bronze or aluminum between these parts. Have something soft to catch the pin when it falls out to prevent unnecessary damage to it.

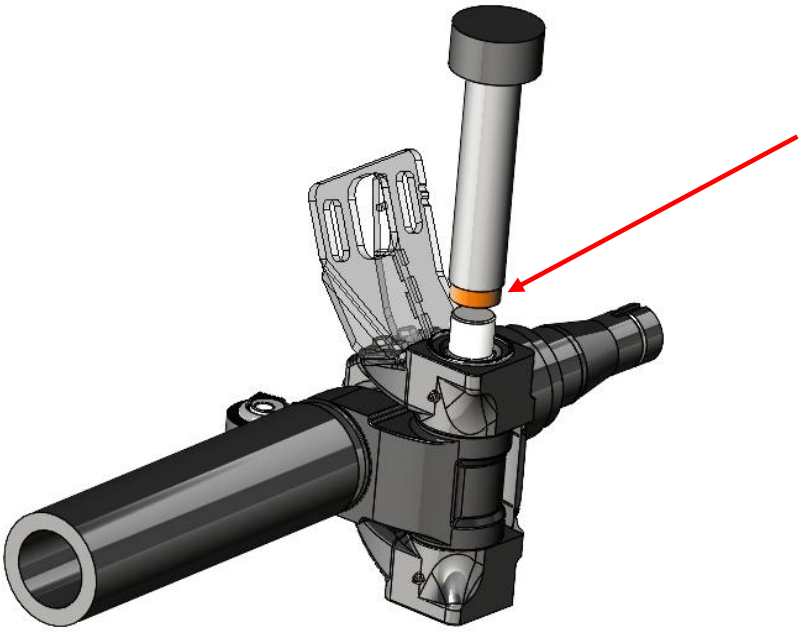

Remove the seal washer from the top of the knuckle. A tube with a diameter 0.5mm less than the knuckle bush will be needed to remove it.

www.granningaxles.ie

Ireland
T. +353 (0) 45 897 553
F. +353 (0) 45 848 638

UK
T. +44 (0) 1925 817 689
F. +44 (0) 1925 817 153

NI
T. +44 (0) 2890 740 055
F. +44 (0) 2890 752 718

Poland
T. +48 (0) 29 753 1616
F. +48 (0) 29 753 1604

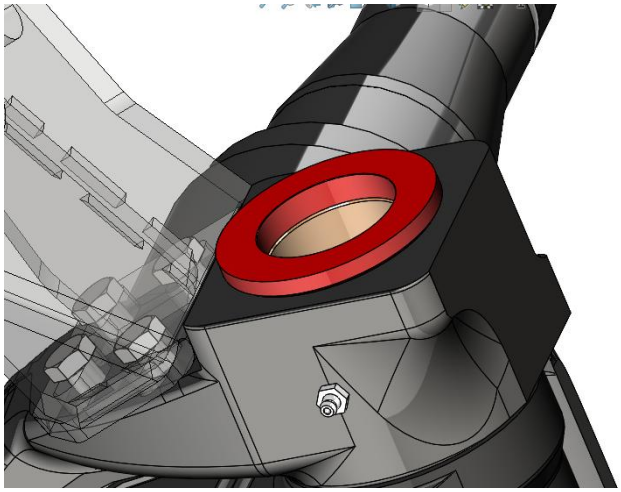

The kingpin bushes in the steer axle knuckle end are now visible. These may be metal or nylon depending on the axle.

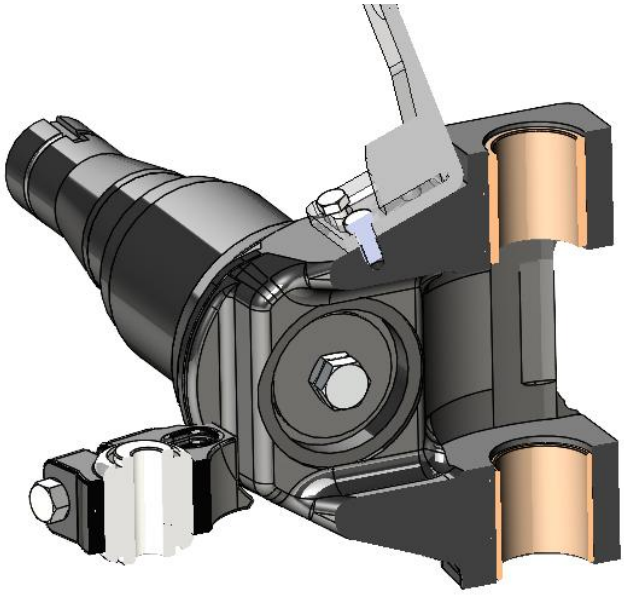

The upper and lower kingpin bushes have to be removed by pressing them towards the centre of the knuckle. Use hydraulic press or mallet to extract bush.

www.granningaxles.ie

Ireland
T. +353 (0) 45 897 553
F. +353 (0) 45 848 638

UK
T. +44 (0) 1925 817 689
F. +44 (0) 1925 817 153

NI
T. +44 (0) 2890 740 055
F. +44 (0) 2890 752 718

Poland
T. +48 (0) 29 753 1616
F. +48 (0) 29 753 1604

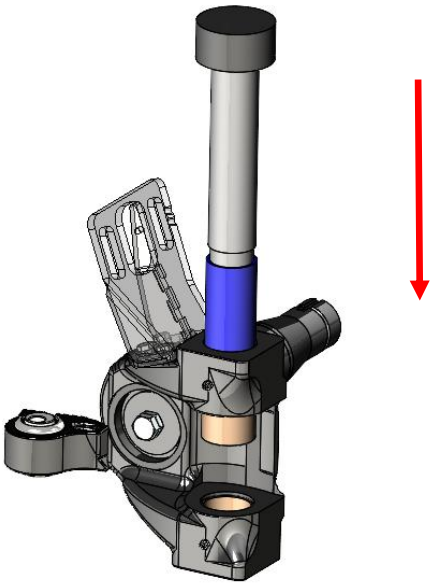

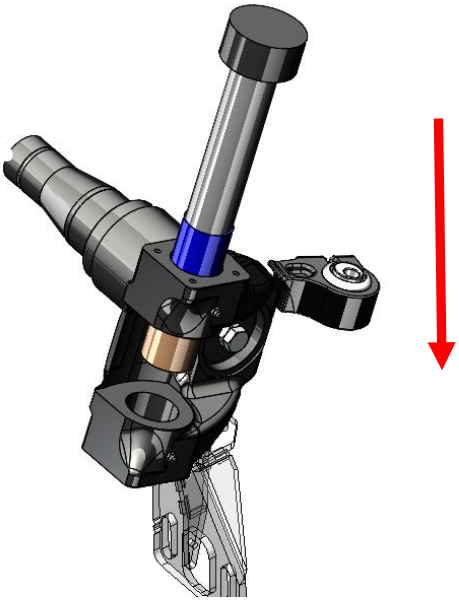

Turn the knuckle over and repeat these extraction procedures to remove the lower bush.

Bush Insertion

www.granningaxles.ie

Ireland
T. +353 (0) 45 897 553
F. +353 (0) 45 848 638

UK
T. +44 (0) 1925 817 689
F. +44 (0) 1925 817 153

NI
T. +44 (0) 2890 740 055
F. +44 (0) 2890 752 718

Poland
T. +48 (0) 29 753 1616
F. +48 (0) 29 753 1604

WARNING Bushes are inserted from the inside out and must be forced into their installation seat.

Start with the bottom bush. Use soft intermediate piece between the new bush and press so the bush is not damaged.

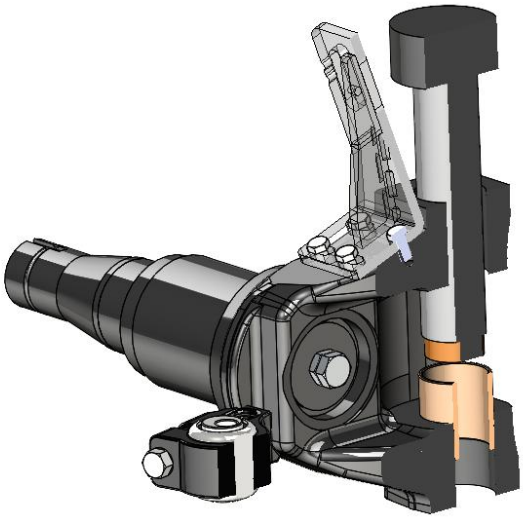

www.granningaxles.ie

Ireland
T. +353 (0) 45 897 553
F. +353 (0) 45 848 638

UK
T. +44 (0) 1925 817 689
F. +44 (0) 1925 817 153

NI
T. +44 (0) 2890 740 055
F. +44 (0) 2890 752 718

Poland
T. +48 (0) 29 753 1616
F. +48 (0) 29 753 1604

For the top bush install the seal washer first. The top bush is then pressed in until the bush rests against the seal washer.

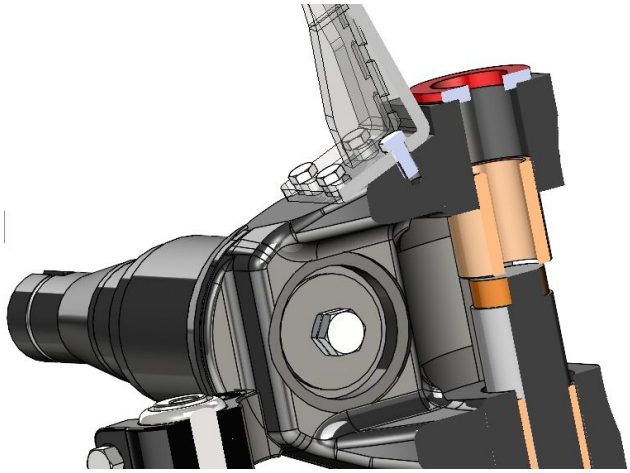

Note: *Before fitting the king pin check grease holes in the bush align with the holes in the casting, if not drill the upper and lower bushes in the grease nipple area (6/7 mm diameter holes).Clean all shavings out from the holes. Remove all debris as necessary. Use the wheel pin to make sure it rotates perfectly in the bushing housing.*

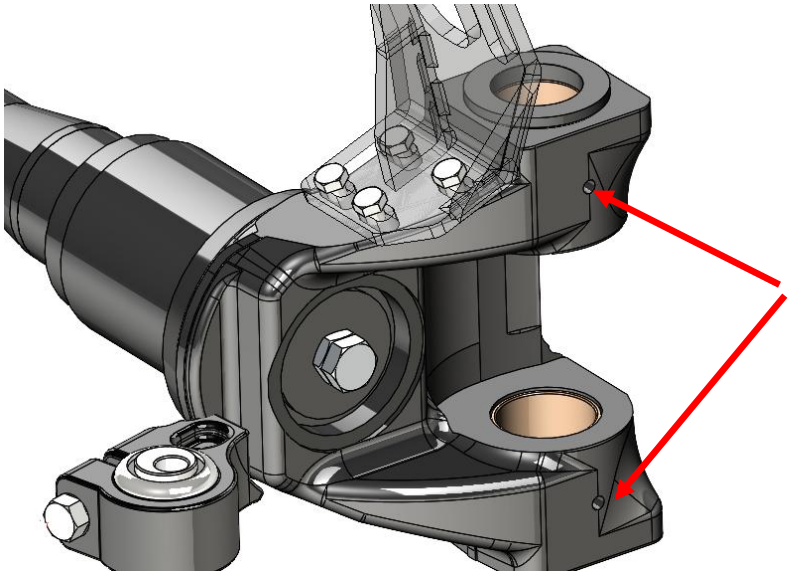

Remove grease nipples and check bush holes are aligned

www.granningaxles.ie

Ireland
T. +353 (0) 45 897 553
F. +353 (0) 45 848 638

UK
T. +44 (0) 1925 817 689
F. +44 (0) 1925 817 153

NI
T. +44 (0) 2890 740 055
F. +44 (0) 2890 752 718

Poland
T. +48 (0) 29 753 1616
F. +48 (0) 29 753 1604

Insert kingpin

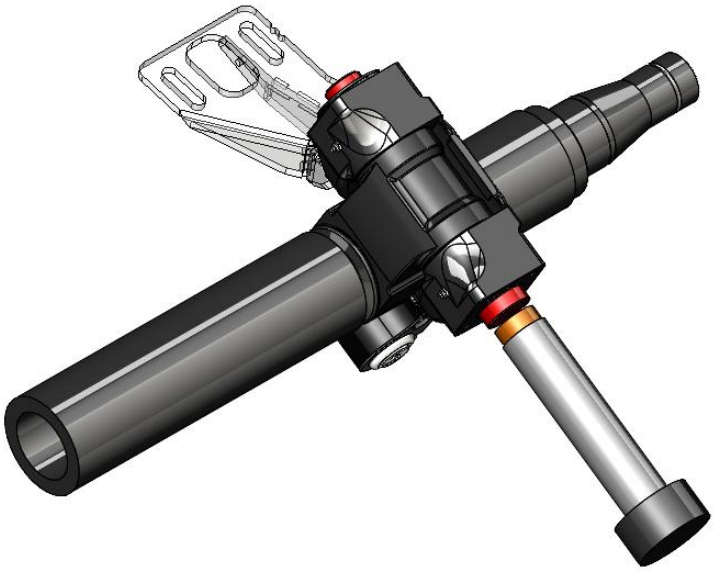

Position the knuckle on the axle body.

Insert the King Pin in order to create a hinge connection between head - axle body and knuckle.

Use a hydraulic press to force the pin into its seat with a 400 daN (4 tonnes) force. As an alternative this job can be done by hammering with a suitable mallet. In both cases always insert a piece of soft steel between these parts to avoid cold-heading the pin.

Knuckle & Axle reassembly

Install the thrust bearings (shim rings), lubricating sliding parts with grease.

Adjust hinge sliding by the coupling using the adjustment ring nut. Procedures are identical to those used to adjust clearance.

Reassemble the tie-rod, lubricating its grease points. When this is done check the condition of the track rod bushes. These must be replaced if they are worn.

Check and adjust toe-in according to below instructions.

Reinstall the axle on the vehicle by performing dismantling procedures in reverse order.

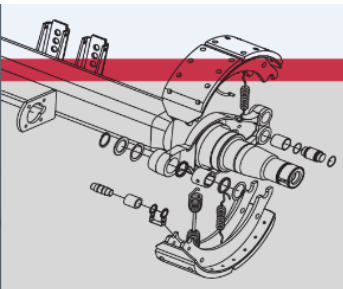

www.granningaxles.ie

Ireland
T. +353 (0) 45 897 553
F. +353 (0) 45 848 638

UK
T. +44 (0) 1925 817 689
F. +44 (0) 1925 817 153

NI
T. +44 (0) 2890 740 055
F. +44 (0) 2890 752 718

Poland
T. +48 (0) 29 753 1616
F. +48 (0) 29 753 1604

Removal of the Locking Cylinder

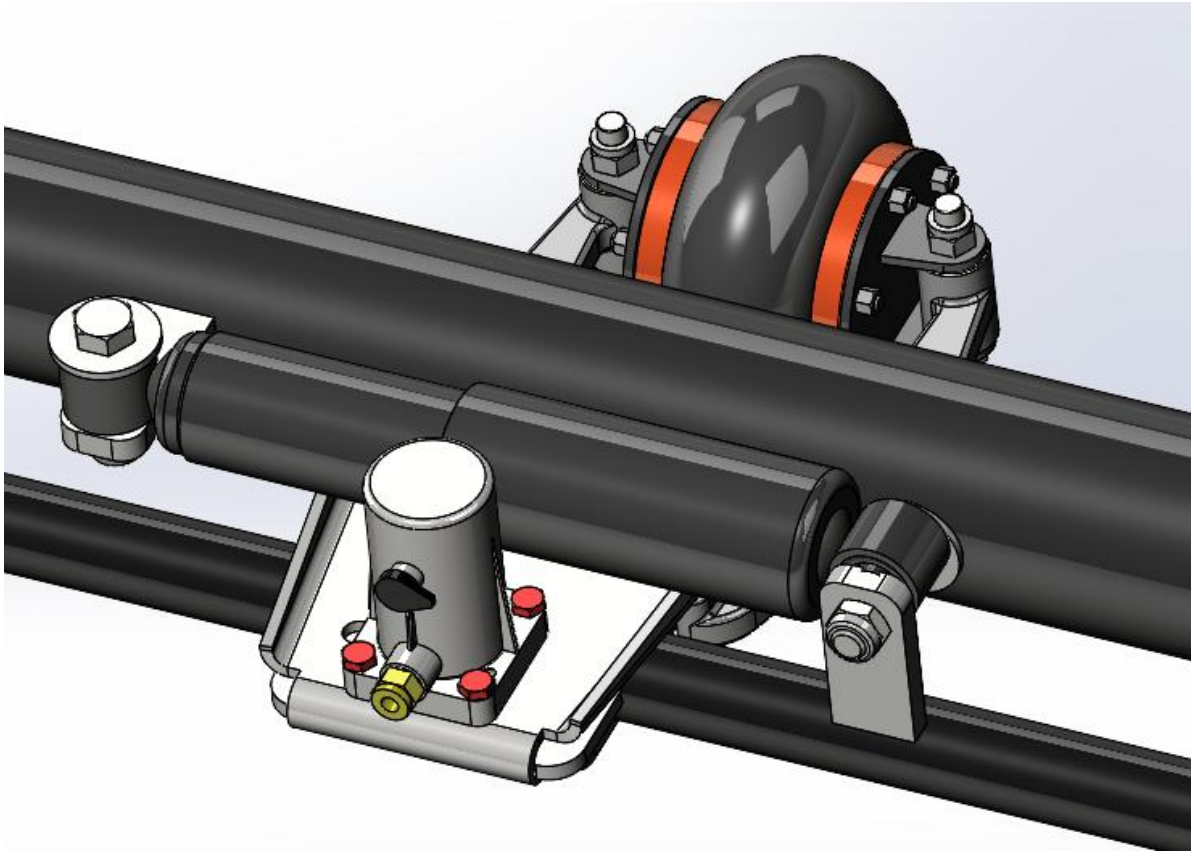

1. Check that the locking cylinder is not pressurized.
2. Remove the air/hydraulic connection to the cylinder.
3. Remove the 4 bolts shown in red.
4. Remove the locking cylinder.

Re-Installation of the Locking Cylinder

1. Place the locking cylinder on its support. Fasten it in place with the 4 bolts replacing the washers. Tighten it to a torque of 37-40 Nm.
2. Re-Connect the locking cylinder air/hydraulic line.
3. Pressurize the circuit.
4. Test for correct locking.

www.granningaxles.ie

Ireland
T. +353 (0) 45 897 553
F. +353 (0) 45 848 638

UK
T. +44 (0) 1925 817 689
F. +44 (0) 1925 817 153

NI
T. +44 (0) 2890 740 055
F. +44 (0) 2890 752 718

Poland
T. +48 (0) 29 753 1616
F. +48 (0) 29 753 1604

Shock absorber Removal

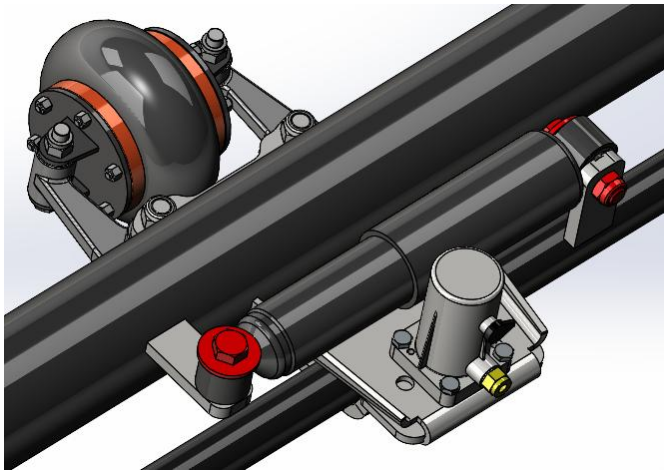

1. Check that wheels are aligned.
2. Remove the self-locking nuts on the shock absorber, the washers and the 2 shock absorber mounting bolts (shown in red above).
3. Remove the shock absorber.

Shock Absorber Replacement

1. Check that wheels are aligned.
2. Locate the shock absorber on its fastening points (shock absorber body located on the bracket welded to the axle body) with the yellow label facing up for correct oil passage. Insert bolts and washers.
3. Tighten the self-locking nuts to a torque of 350 - 370 Nm. Note:- self- locking nuts should be replaced on re-assembly.
4. Check that the shock absorber is approx.. 450 mm long (with the axle in the locked position).

www.granningaxles.ie

Ireland
T. +353 (0) 45 897 553
F. +353 (0) 45 848 638

UK
T. +44 (0) 1925 817 689
F. +44 (0) 1925 817 153

NI
T. +44 (0) 2890 740 055
F. +44 (0) 2890 752 718

Poland
T. +48 (0) 29 753 1616
F. +48 (0) 29 753 1604

Toe-In checking and adjustment

To check the tracking/toe-in on steer axles beams follow the steps outlined below.

1. Place the built steer axle on level jig. Ensure the kingpin is perpendicular to the ground.

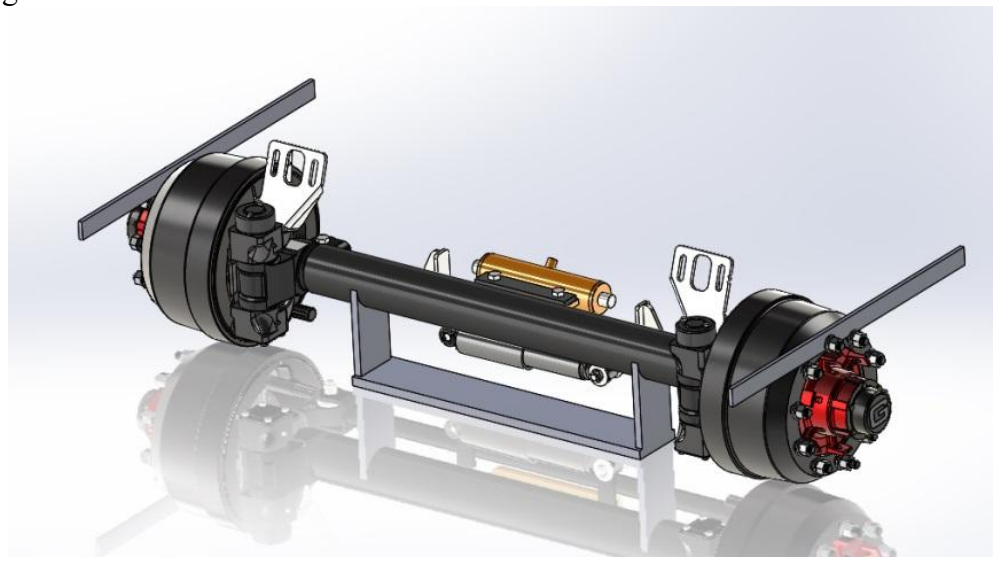

Figure 1

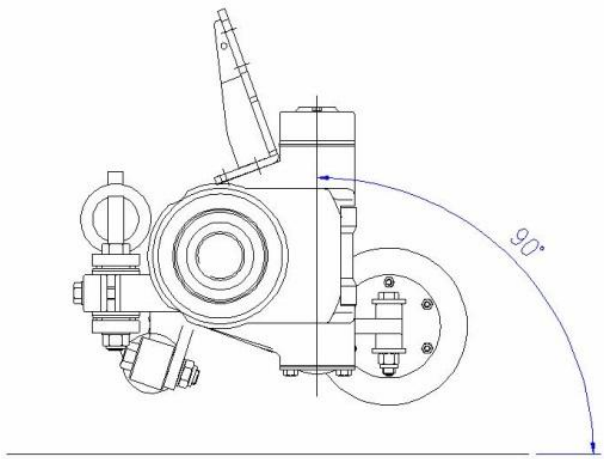

Figure 2

www.granningaxles.ie

Ireland
T. +353 (0) 45 897 553
F. +353 (0) 45 848 638

UK
T. +44 (0) 1925 817 689
F. +44 (0) 1925 817 153

NI
T. +44 (0) 2890 740 055
F. +44 (0) 2890 752 718

Poland
T. +48 (0) 29 753 1616
F. +48 (0) 29 753 1604

2. Use two wheel nuts to fix straight edges to the drum faces.

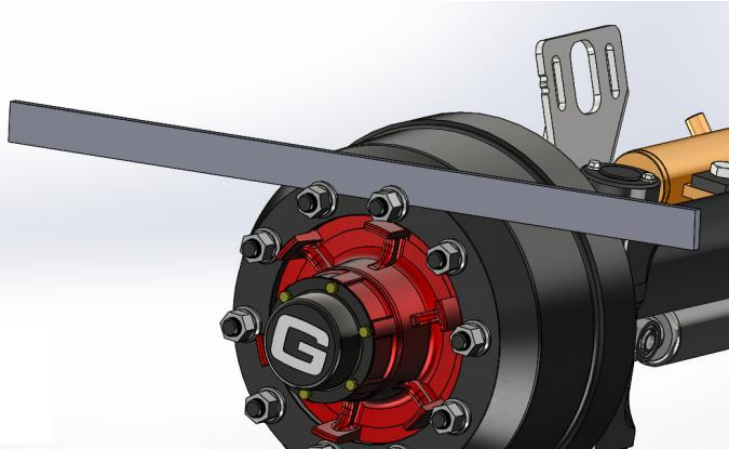

Figure 3

3. Use a slack adjuster on each camshaft to apply the brakes to stop the drum from rotating. Tighten the hex nut on the slack adjuster to apply the brakes if no brake chambers are fitted. Ensure the two straight edges are parallel to the floor. Use a spirit level to check.

4. Ensure the straight edges are equally distant from the centre of the axle.

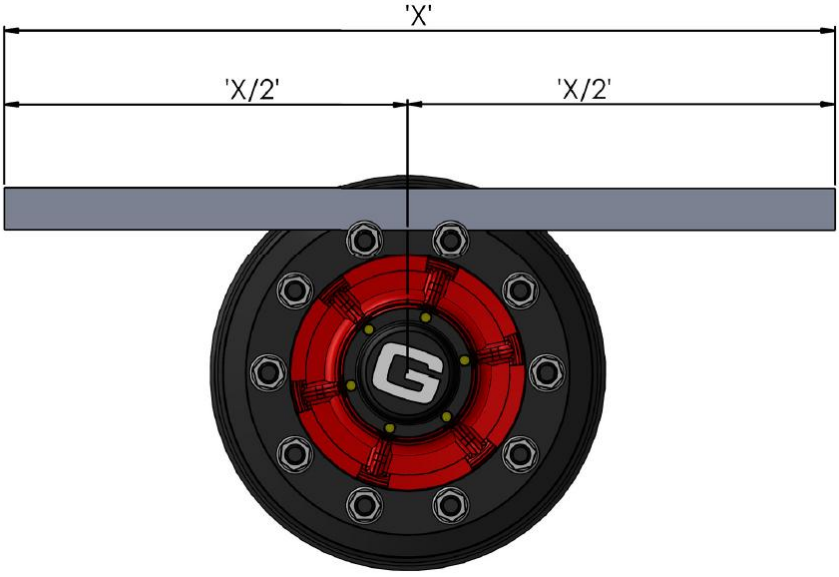

Figure 4

www.granningaxles.ie

Ireland
T. +353 (0) 45 897 553
F. +353 (0) 45 848 638

UK
T. +44 (0) 1925 817 689
F. +44 (0) 1925 817 153

NI
T. +44 (0) 2890 740 055
F. +44 (0) 2890 752 718

Poland
T. +48 (0) 29 753 1616
F. +48 (0) 29 753 1604

5. Supply air/hydraulic oil to the centre port on the hydraulic cylinder to ‘lock’ the steering. Keep air/hydraulic oil supplied to the ram during step 6.

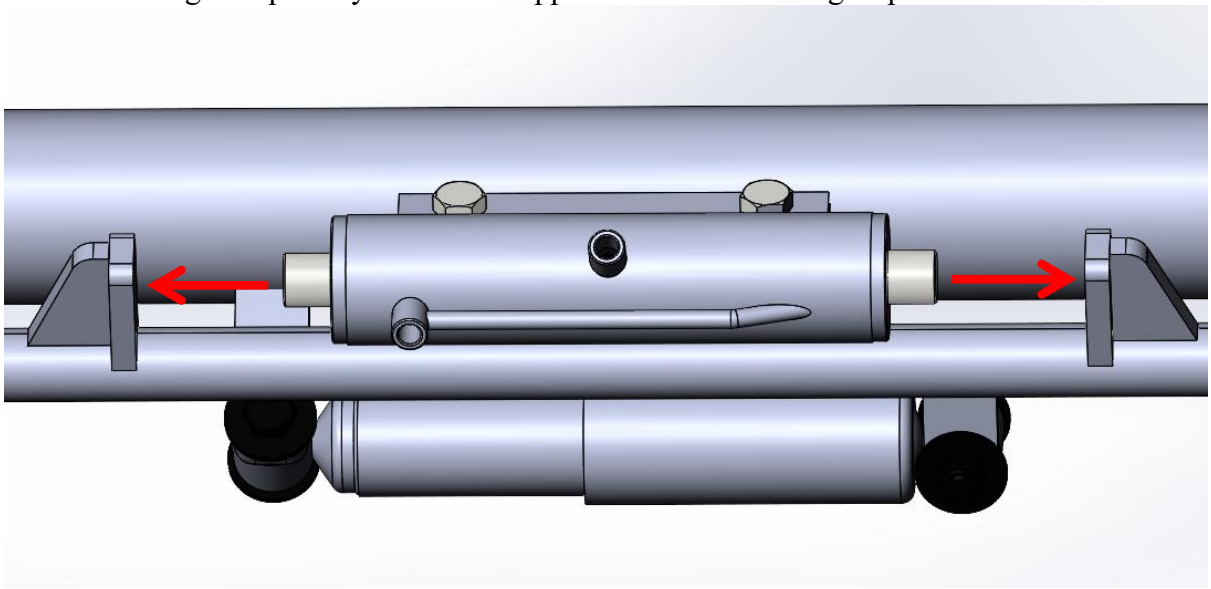

Figure 5

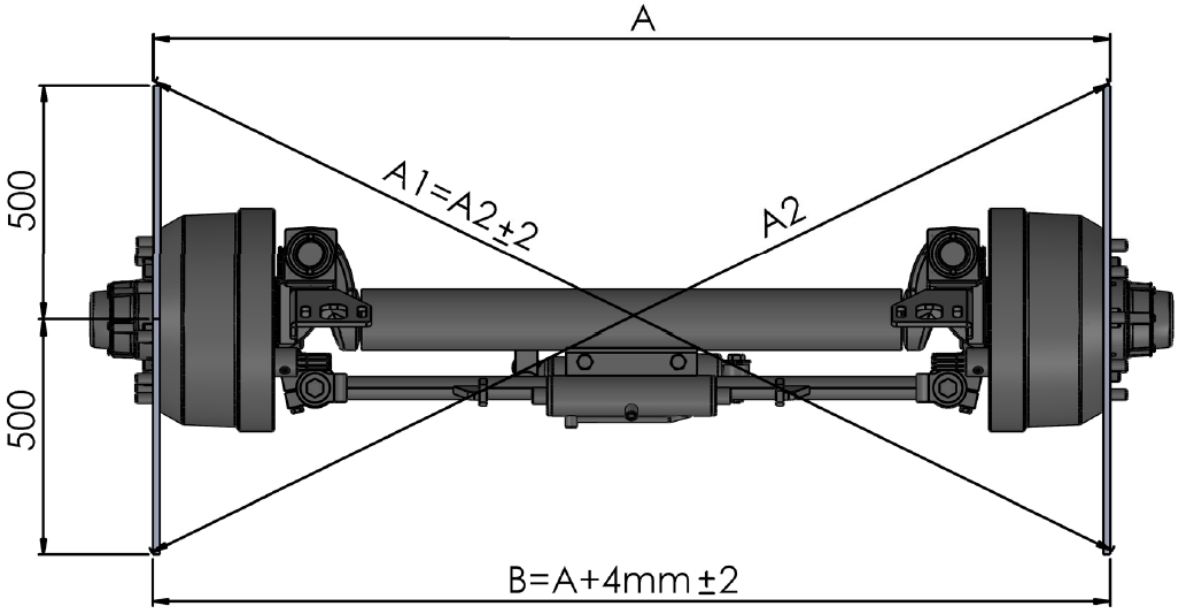

Figure 6

6. Measure the dimensions **‘A’, ‘B’, ‘A1’, and ‘A2’**.

www.granningaxles.ie

Ireland
T. +353 (0) 45 897 553
F. +353 (0) 45 848 638

UK
T. +44 (0) 1925 817 689
F. +44 (0) 1925 817 153

NI
T. +44 (0) 2890 740 055
F. +44 (0) 2890 752 718

Poland
T. +48 (0) 29 753 1616
F. +48 (0) 29 753 1604

7. If the dimensions are within tolerance the steer axle is alignment is correct, if not continue with the following steps.

8. Keep the air/hydraulic oil supplied to the locking ram.

9. Loosen the M24 nuts on both ends of the track rod and M14 bolts on the knuckle. The eccentric bush should drop down about 5mm to reveal holes to allow them to be rotated. Note on the 860 series axles the bolt is an eccentric bolt and the bush is a centre hole bush.

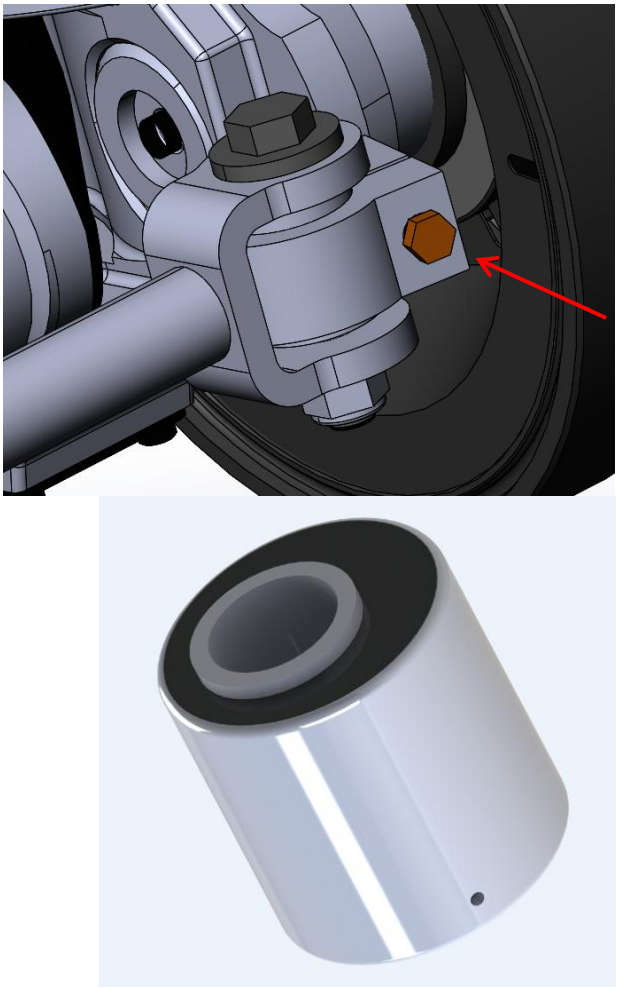

Figure 7

10. Use an Allen key to rotate the eccentric bushes (37096) in either end of the track rod. This will cause each spindle, hub/drum assembly to rotate slightly around the kingpin. (Note : - allen key hole not always present).

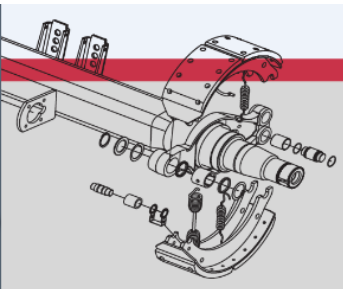

www.granningaxles.ie

Ireland
T. +353 (0) 45 897 553
F. +353 (0) 45 848 638

UK
T. +44 (0) 1925 817 689
F. +44 (0) 1925 817 153

NI
T. +44 (0) 2890 740 055
F. +44 (0) 2890 752 718

Poland
T. +48 (0) 29 753 1616
F. +48 (0) 29 753 1604

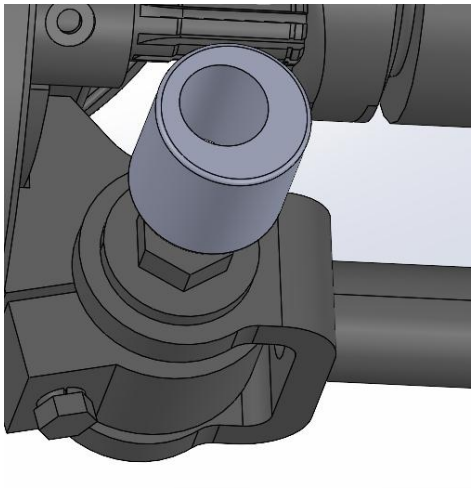

Figure 8

11. Check dimensions A, B, A1, and A2 after each slight turn of the eccentric bushes.

12. Once the 4 dimensions are within tolerance, lift the track rod by hand to return the eccentric bushes to their original positions as shown in Step 9. Tighten the M14 bolts to hold the bushing in place.

13. Fully tighten the M24 nuts on the track rod and M14 bolts again.

14. Remove the air/hydraulic oil supply to the ram. Steer the axle left and right and "lock" the steering again. Measure dimensions A, B, A1, and A2 again.

15. If the dimensions are within tolerance, the steer axle is now ready for the road.

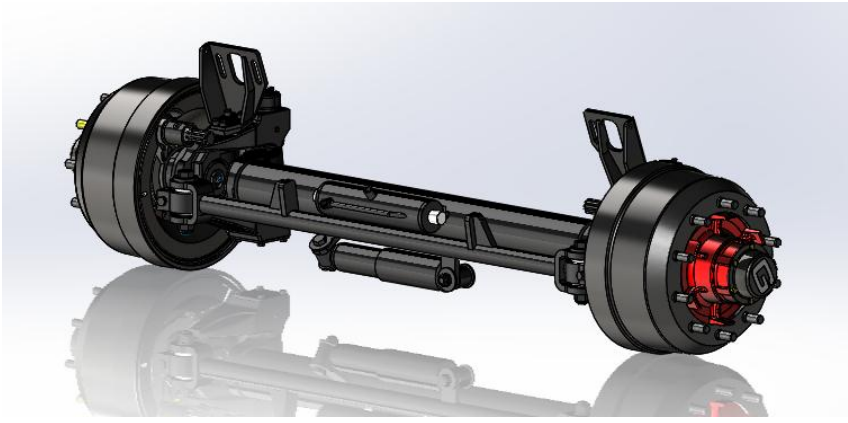

www.granningaxles.ie

Ireland
T. +353 (0) 45 897 553
F. +353 (0) 45 848 638

UK
T. +44 (0) 1925 817 689
F. +44 (0) 1925 817 153

NI
T. +44 (0) 2890 740 055
F. +44 (0) 2890 752 718

Poland
T. +48 (0) 29 753 1616
F. +48 (0) 29 753 1604

Adjusting Pin Clearance

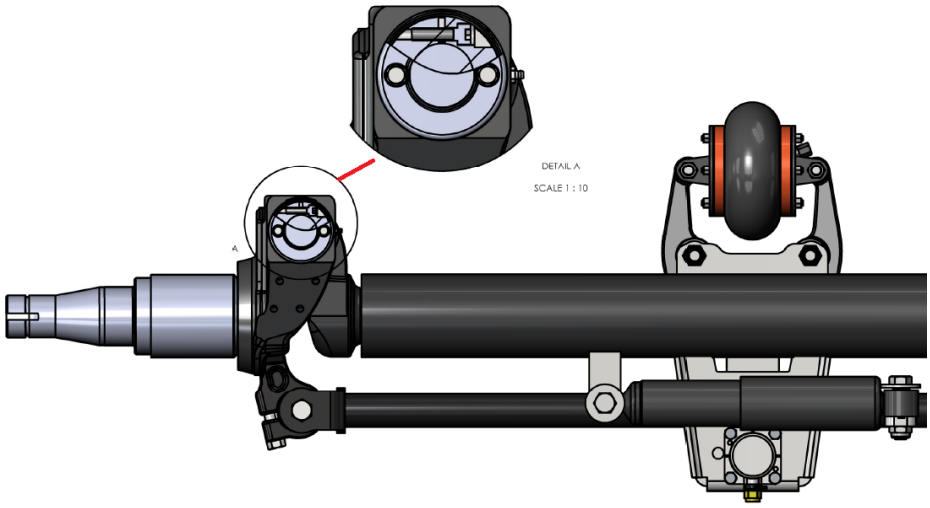

1. Disconnect shock absorber from the tie rod.
2. Remove protective cover from the stub axle pin adjustment nut.
3. Loosen the pinch bolt.
4. Tighten adjustment nut until clearance is eliminated.
5. Tighten pinch bolt then replace cover and shock absorber

Replace the pin whenever clearance cannot be eliminated or in any case every 400,000-500,000 km.

Lubrication

Refer to the figure below for lubrication. Insert grease into the greasing points shown

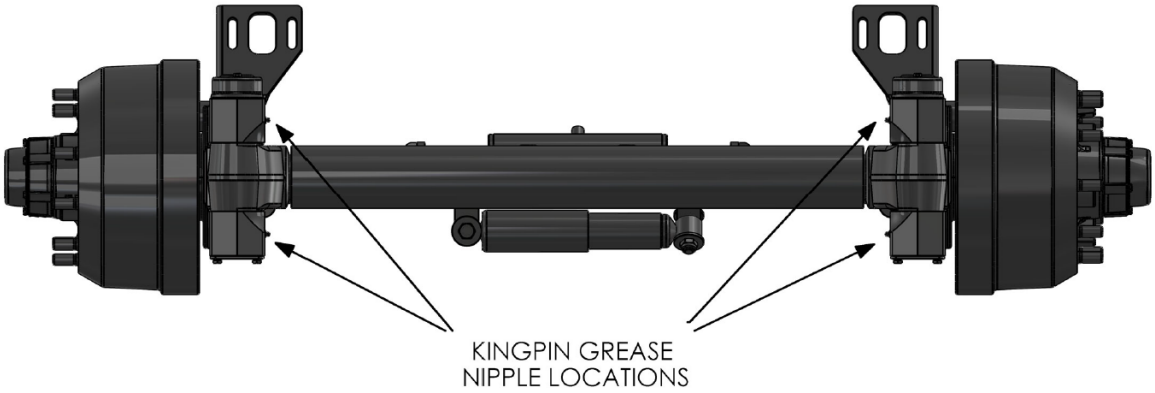

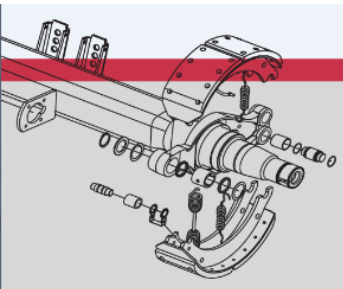

www.granningaxles.ie

Ireland
T. +353 (0) 45 897 553
F. +353 (0) 45 848 638

UK
T. +44 (0) 1925 817 689
F. +44 (0) 1925 817 153

NI
T. +44 (0) 2890 740 055
F. +44 (0) 2890 752 718

Poland
T. +48 (0) 29 753 1616
F. +48 (0) 29 753 1604

Steer axle clearance

As the steer axle knuckle turns the steer axle wheel, brake chamber and slack adjuster can get too close to the chassis or suspension. This can cause serious damage. The steer axle clearance has to be checked in the maximum steer position left and right and all the positions of the suspension. If the clearance is too close the amount of steer axle angle can be reduced by loosening the steer limiting bolt lock nut and unscrewing the adjusting bolt out. After checking the clearance the lock nut is then torqued to 350Nm to hold the limiting bolt in place. If the steer angle is never to be changed and the vehicle experiences a lot of vibration it may be more practical to tack weld the bolt in place to prevent adjustment.

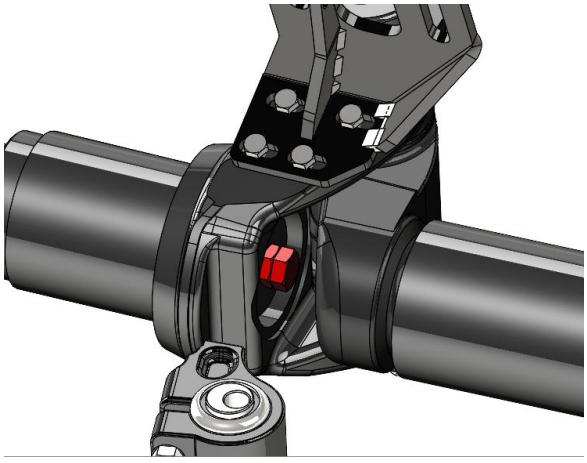

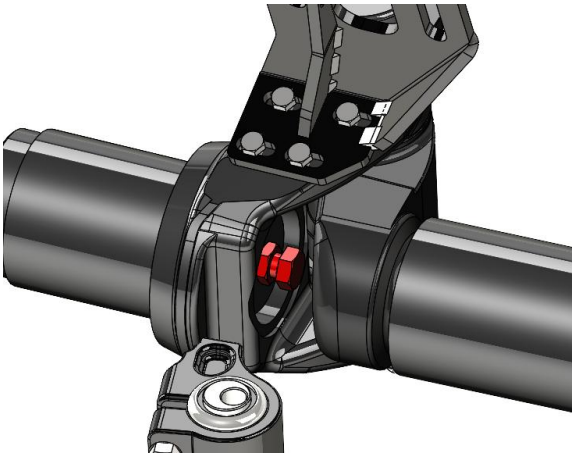

The following information give the angle setting procedure for each of the different types of axle series.

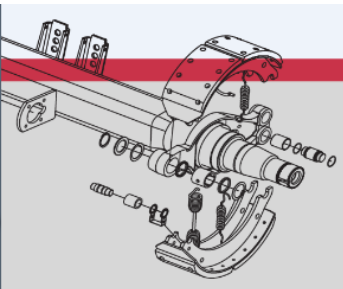

www.granningaxles.ie

Ireland
T. +353 (0) 45 897 553
F. +353 (0) 45 848 638

UK
T. +44 (0) 1925 817 689
F. +44 (0) 1925 817 153

NI
T. +44 (0) 2890 740 055
F. +44 (0) 2890 752 718

Poland
T. +48 (0) 29 753 1616
F. +48 (0) 29 753 1604

Steer angle adjustment for each series

100A/300A steer axles

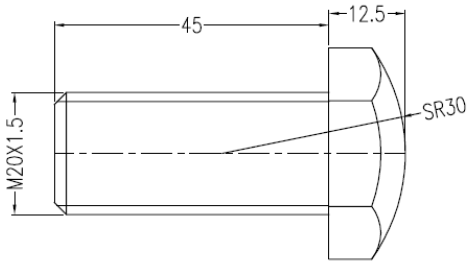

Uses Steer axle end stop bolt 37084 and nut 37083

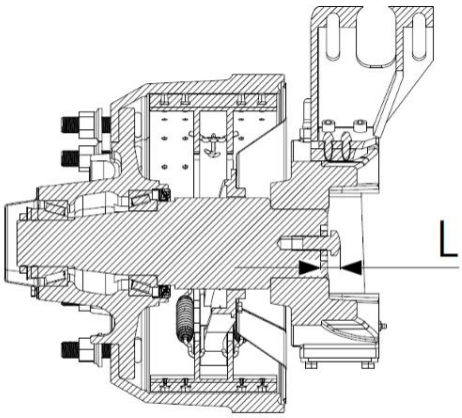

Steer angle limited to (°)	Bolt Length L from spindle face (mm)	Bolt Length from under head (mm)
18	18.5	6
16	23.5	11
14	28	15.5
12	32	19.5
10	38	25.5
8	42	29.5

After setting length torque end stop bolt to 350Nm.

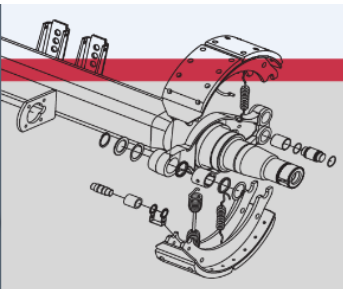

www.granningaxles.ie

Ireland
T. +353 (0) 45 897 553
F. +353 (0) 45 848 638

UK
T. +44 (0) 1925 817 689
F. +44 (0) 1925 817 153

NI
T. +44 (0) 2890 740 055
F. +44 (0) 2890 752 718

Poland
T. +48 (0) 29 753 1616
F. +48 (0) 29 753 1604

To get 18 degree steer the adjusting nut needs to be removed and adjusting bolt tack welded at 18.5mm.

100F/300F steer axles

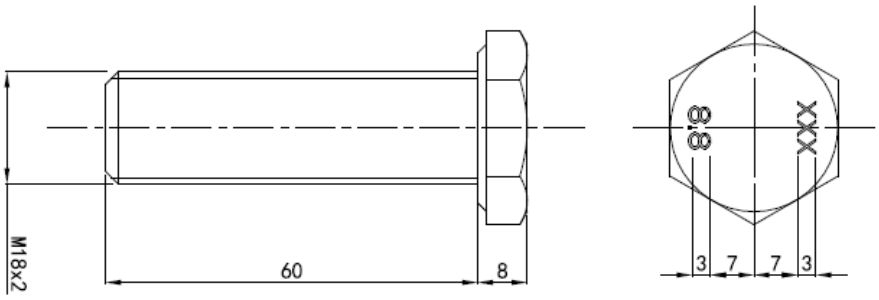

Uses Steer axle end stop bolt 37355 and nut 37363

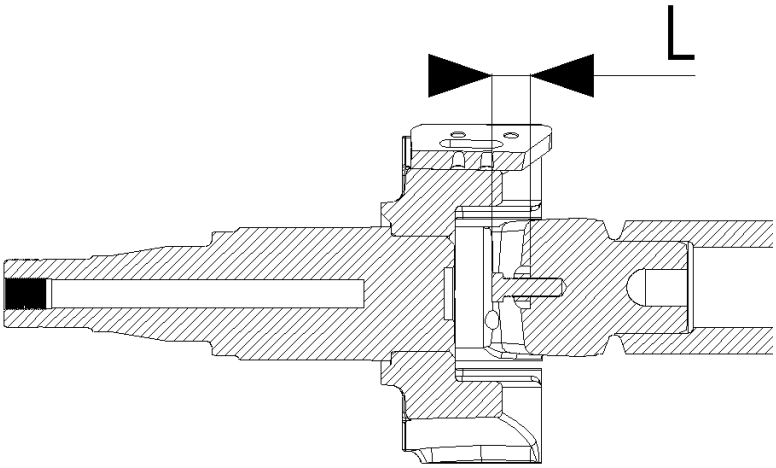

Steer angle limited to (°)	Bolt Length L from knuckle face (mm)	Bolt Length from under head (mm)
18	35.5	27.5
16	41	33
14	46	38
12	51	43
10	56.5	48.5
8	61	53

After setting length torque end stop bolt to 350Nm.

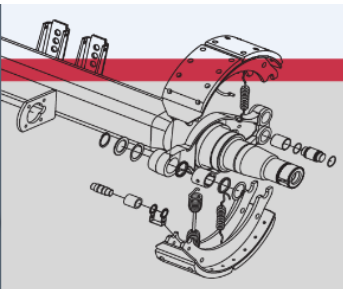

www.granningaxles.ie

Ireland
T. +353 (0) 45 897 553
F. +353 (0) 45 848 638

UK
T. +44 (0) 1925 817 689
F. +44 (0) 1925 817 153

NI
T. +44 (0) 2890 740 055
F. +44 (0) 2890 752 718

Poland
T. +48 (0) 29 753 1616
F. +48 (0) 29 753 1604

100/300 steer axles

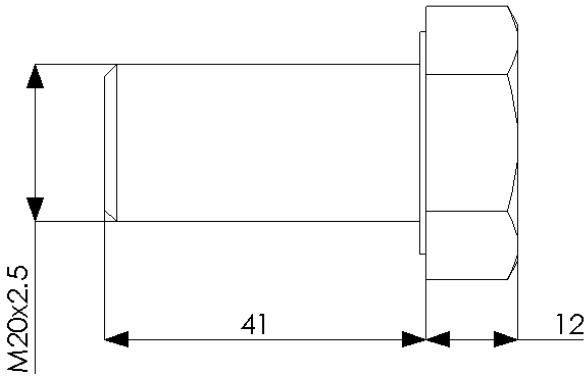

Uses Steer axle end stop bolt 37027 and nut 37028

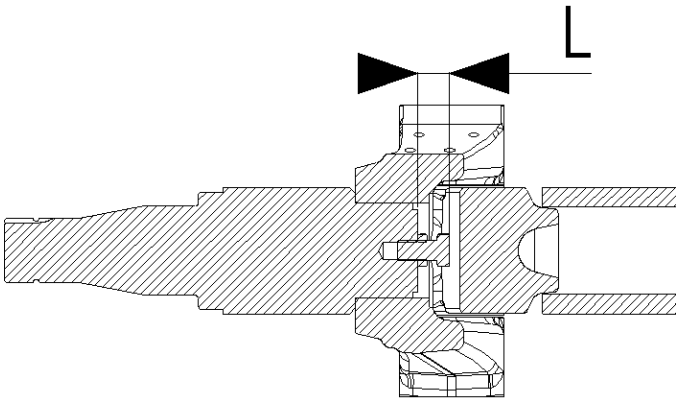

Steer angle limited to (°)	Bolt Length L from knuckle face (mm)	Bolt Length from under head (mm)
13	12	0
10	18	6
8	22	10

After setting length torque end stop bolt to 350Nm.

To get 13 and 10 degree steer the adjusting nut needs to be removed and adjusting bolt tack welded at 12/18.

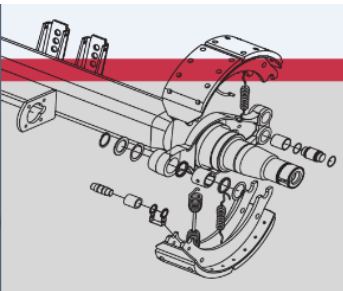

www.granningaxles.ie

Ireland
T. +353 (0) 45 897 553
F. +353 (0) 45 848 638

UK
T. +44 (0) 1925 817 689
F. +44 (0) 1925 817 153

NI
T. +44 (0) 2890 740 055
F. +44 (0) 2890 752 718

Poland
T. +48 (0) 29 753 1616
F. +48 (0) 29 753 1604

Periodic maintenance

The periodic maintenance schedule that is indicated refers to standard operating conditions. The schedule may need to be changed case by case depending on the intensity of use. We recommend complying with the schedule. The fleet maintenance manager, driver or owner must always comply with the manufacturer's instructions and warnings, and with local legislation. Use in conjunction with Granning Axle Brake series manual.

PREVENTIVE MAINTENANCE SCHEDULE							
		km. traveled/period					
PARA-GRAPH	TYPE OF INTERVENTION	START UP	FROM 500 TO 1.500	every 5.000 km or every 2 months	every 25.000 km or every 4 months	every 50.000 km or every 6 months	every 100.000 km or every 12 months
9.3	Torque nuts and bolts		Y			Y	
7.2	Lubrication				Y		
6	Check toe-in		Y		Y		Y
6	Check geometric layout					Y	Y
6	Check pin wear						Y
	Check tire wear			Y			

Note *The tightness of wheel nuts must be checked every day during the first week of work.*

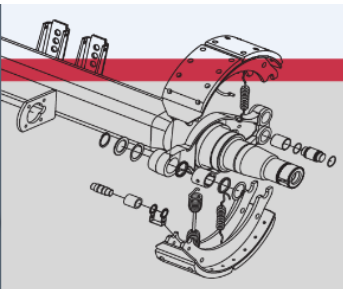

www.granningaxles.ie

Ireland
T. +353 (0) 45 897 553
F. +353 (0) 45 848 638

UK
T. +44 (0) 1925 817 689
F. +44 (0) 1925 817 153

NI
T. +44 (0) 2890 740 055
F. +44 (0) 2890 752 718

Poland
T. +48 (0) 29 753 1616
F. +48 (0) 29 753 1604

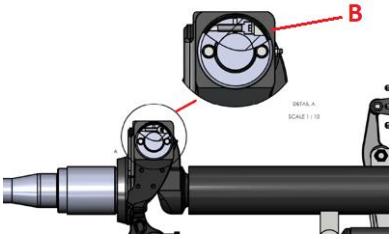

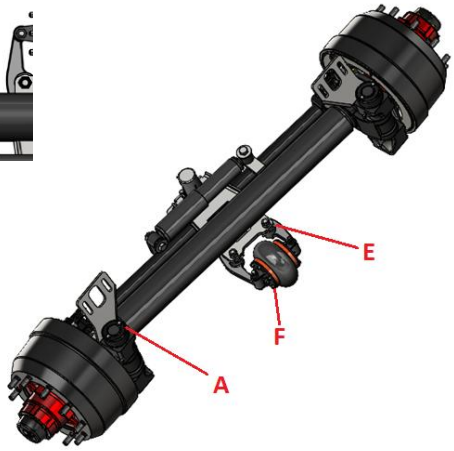

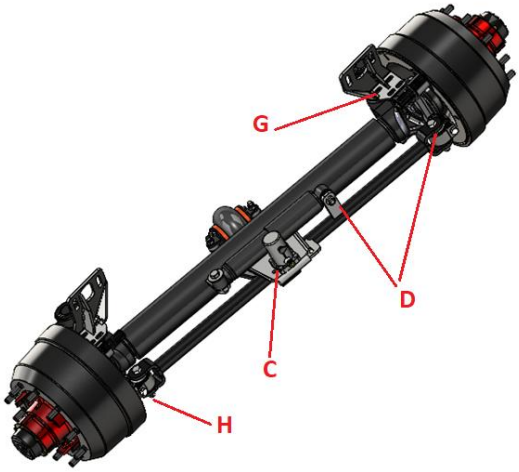

Tightening torques

Steer Axle Components

Description	*Tightening torque*	*Location*
	Nm	
Fastening screws for kingpin cover	*9 - 10*	A
Adjustment ring nut bolts	*37 - 40*	B
lock cylinder Bolts	*37 - 40*	C
Shock absorber and track rod bolt	*350 - 370*	D
Torpress bag arm fastening nuts	*85 - 90*	E
Torpress bag support fastening nuts	*25 - 27*	F
BC bracket screws	*40 – 44*	G
Knuckle arm bolts	*178 - 196*	H

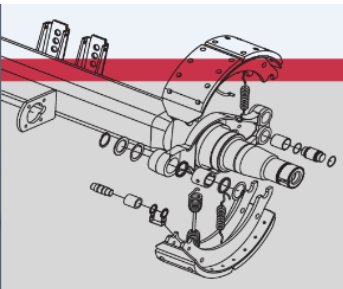

www.granningaxles.ie

Ireland
T. +353 (0) 45 897 553
F. +353 (0) 45 848 638

UK
T. +44 (0) 1925 817 689
F. +44 (0) 1925 817 153

NI
T. +44 (0) 2890 740 055
F. +44 (0) 2890 752 718

Poland
T. +48 (0) 29 753 1616
F. +48 (0) 29 753 1604

Steer Axle Ram Piping

37179 – Self Steer Locking Ram

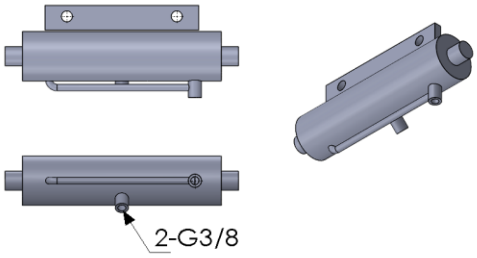

Lock Steer Axle Straight

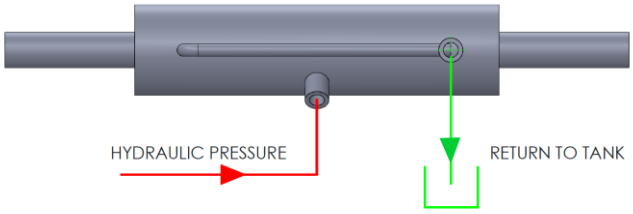

Unlock Steer Axle

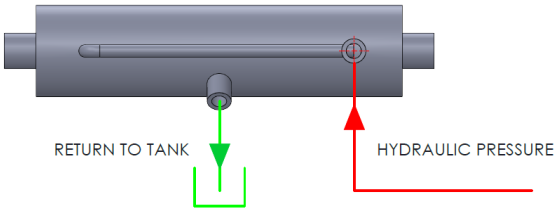

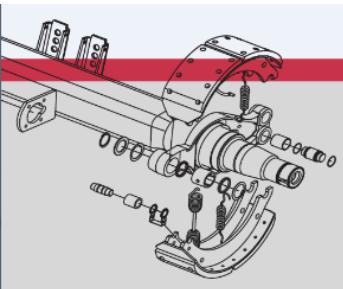

www.granningaxles.ie

Ireland
T. +353 (0) 45 897 553
F. +353 (0) 45 848 638

UK
T. +44 (0) 1925 817 689
F. +44 (0) 1925 817 153

NI
T. +44 (0) 2890 740 055
F. +44 (0) 2890 752 718

Poland
T. +48 (0) 29 753 1616
F. +48 (0) 29 753 1604

37253 – Forced Steer Hydraulic Ram

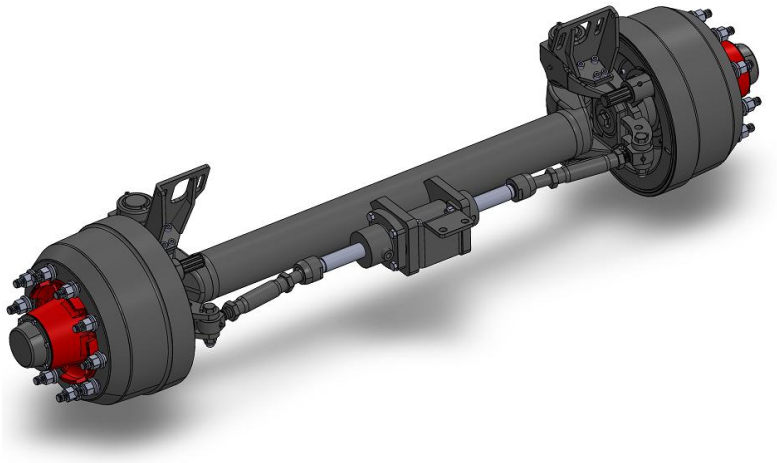

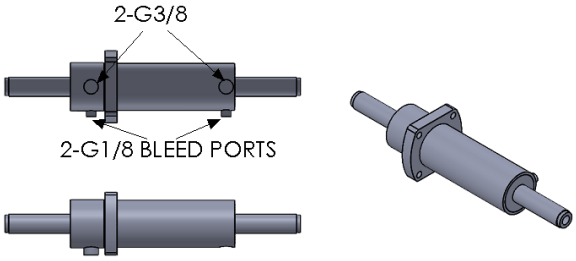

Steering Right

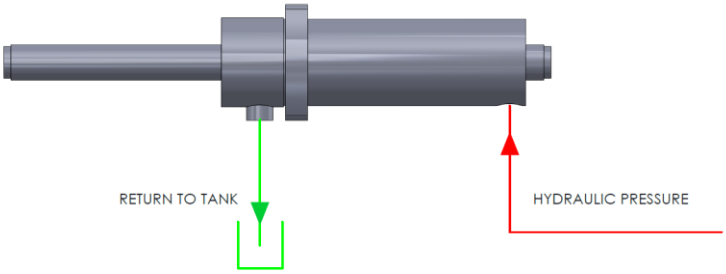

Steering Left

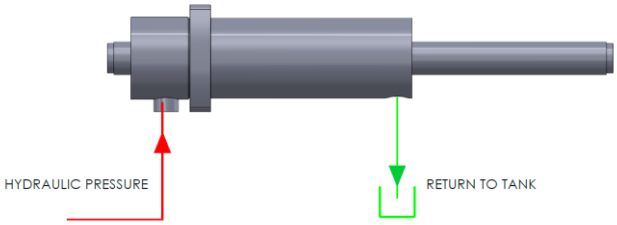

www.granningaxles.ie

Ireland
T. +353 (0) 45 897 553
F. +353 (0) 45 848 638

UK
T. +44 (0) 1925 817 689
F. +44 (0) 1925 817 153

NI
T. +44 (0) 2890 740 055
F. +44 (0) 2890 752 718

Poland
T. +48 (0) 29 753 1616
F. +48 (0) 29 753 1604

37293 – Self Steer Hydraulic Ram

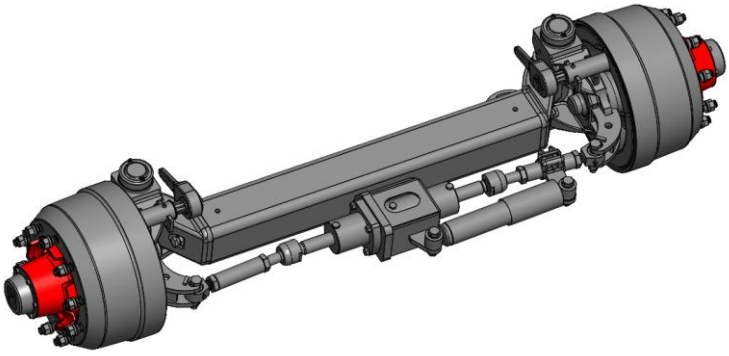

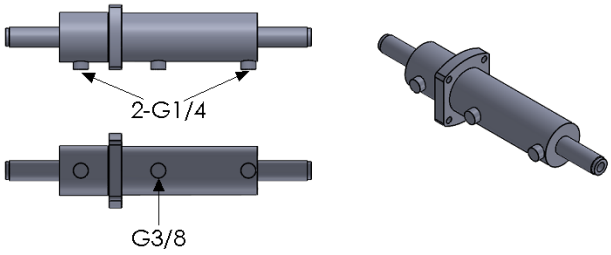

Lock Steer Axle Straight

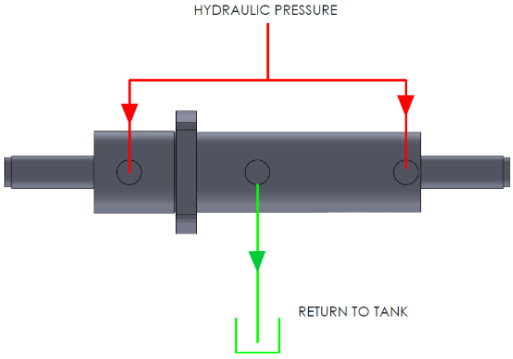

Steer Axle Allowed to Self Steer

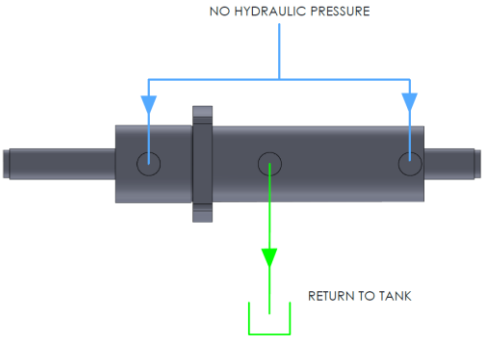

www.granningaxles.ie

Ireland
T. +353 (0) 45 897 553
F. +353 (0) 45 848 638

UK
T. +44 (0) 1925 817 689
F. +44 (0) 1925 817 153

NI
T. +44 (0) 2890 740 055
F. +44 (0) 2890 752 718

Poland
T. +48 (0) 29 753 1616
F. +48 (0) 29 753 1604

37178 – Forced or Self Steer Ram

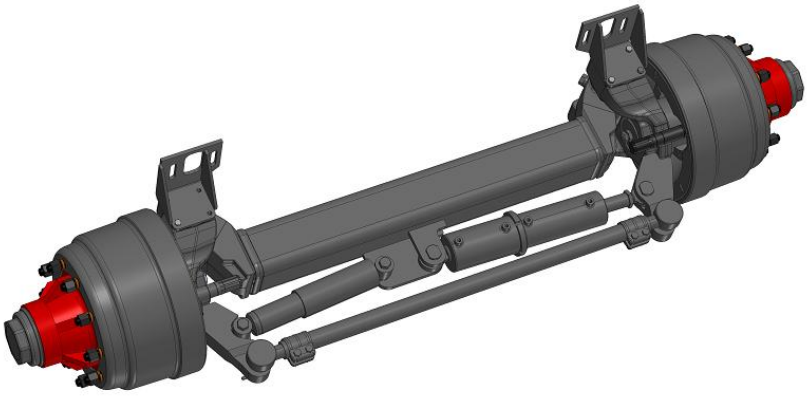

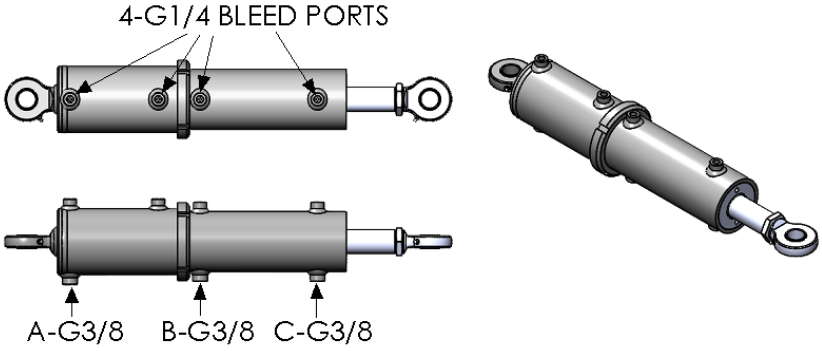

Force Steer Axle Left

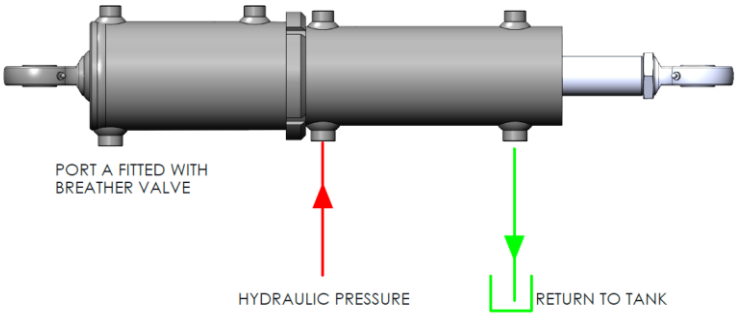

www.granningaxles.ie

Ireland
T. +353 (0) 45 897 553
F. +353 (0) 45 848 638

UK
T. +44 (0) 1925 817 689
F. +44 (0) 1925 817 153

NI
T. +44 (0) 2890 740 055
F. +44 (0) 2890 752 718

Poland
T. +48 (0) 29 753 1616
F. +48 (0) 29 753 1604

Force Steer Axle Right

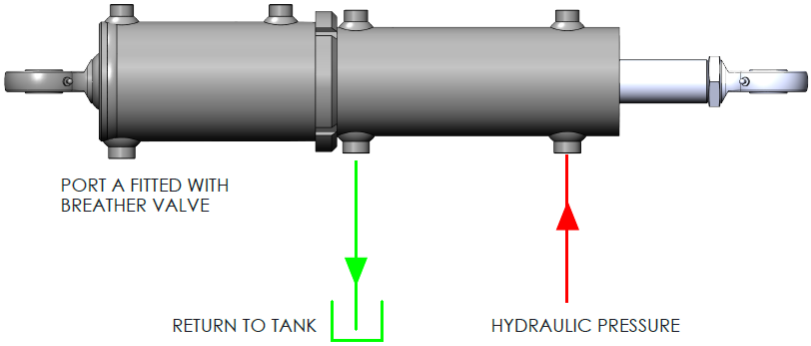

Self Steer Lock Steer Axle Straight

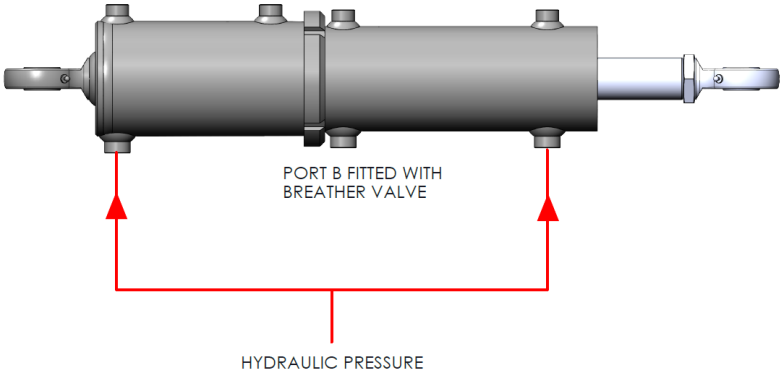

Steer Axle Allowed to Self Steer

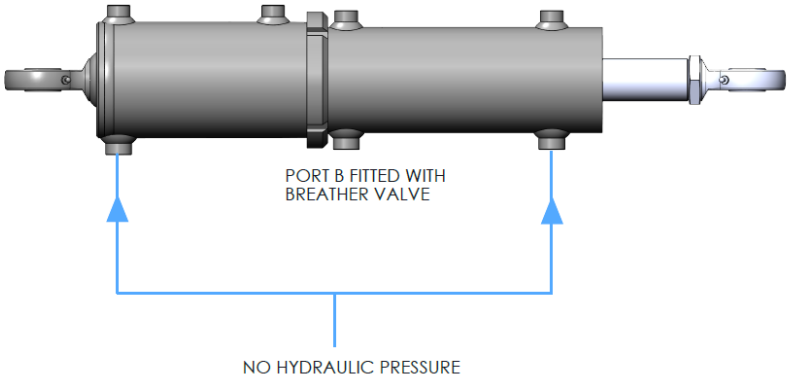

www.granningaxles.ie

Ireland
T. +353 (0) 45 897 553
F. +353 (0) 45 848 638

UK
T. +44 (0) 1925 817 689
F. +44 (0) 1925 817 153

NI
T. +44 (0) 2890 740 055
F. +44 (0) 2890 752 718

Poland
T. +48 (0) 29 753 1616
F. +48 (0) 29 753 1604

Contact and technical Information

For **Axle** and **Suspension** products: **www.granningaxles.ie**

For replacement **Parts**: **www.airsprings.com**

Granning Axles Ltd
Naas Industrial Estate
Naas
Co. Kildare W91 YH30
Ireland
Phone: +353 (0) 45 897 553
Fax: +353 (0) 45 848 638

Granning UK Ltd
Unit 1, Westaway 21
Chesford Grange
Warrington WA1 4SZ
United Kingdom

Phone: +44 (0) 1925 817 689
Fax: +44 (0) 1925 817 153

Granning Belfast
201 York Road
Belfast BT3 9BL
Northern Ireland

Phone: +44 (0) 2890 740 055
Fax: +44 (0) 2890 752 718

Granning Polska Sp. z o.o.
ul. Pułtuska 112A
07-200 Wyszków
woj . Mazowieckie
Polska
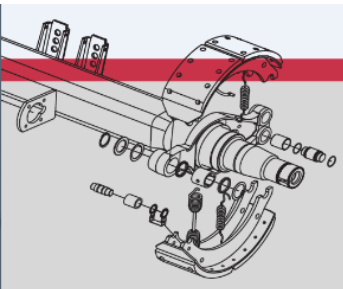
Phone: +48 (0) 29 753 1616
Fax: +48 (0) 29 753 1604