ITEM No:	DESCRIPTION	PART NUMBER	QTY	ITEM No:	DESCRIPTION	PART NUMBER	QTY
1	FRONT HANGER	97700F	2	7	ADJUSTABLE TORQUE ARM 450MM	36055	2
2	REAR HANGER ASSEMBLY	97782F	2	8	TORQUE ARM BUSH BOLT ASSEMBLY (Poly)	97710F	8
3	3 LEAF SPRING 100MM	97746F	4	9	U-BOLT ASSEMBLY	97706F	8
4	AXLE SADDLE	97704F	4	10	CENTRE EQUALISER ASSEMBLY	97701F	2
5	SPRING CLIP PLATE	97705F	4	11			
6	RIGID TORQUE ARM 450MM	97776F	2	12			

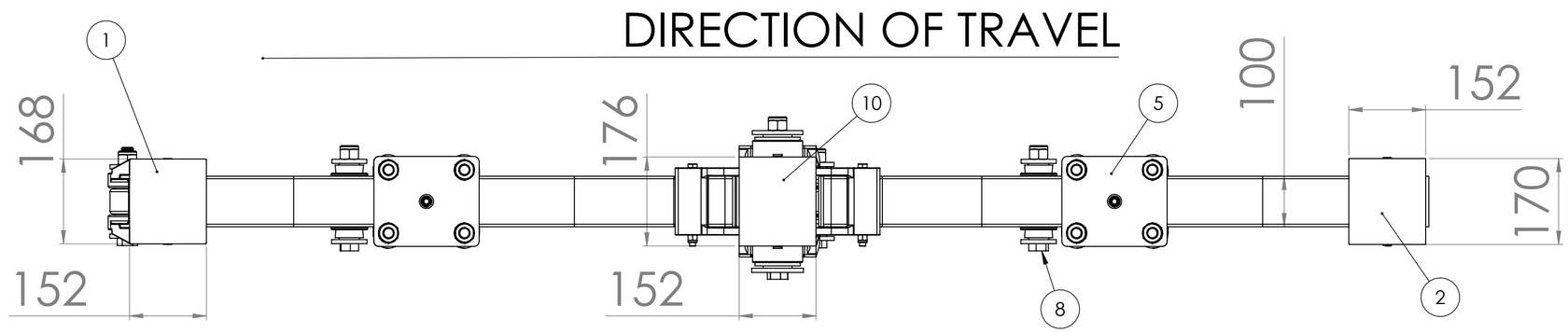

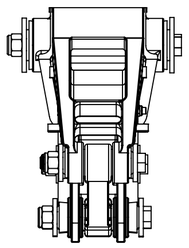

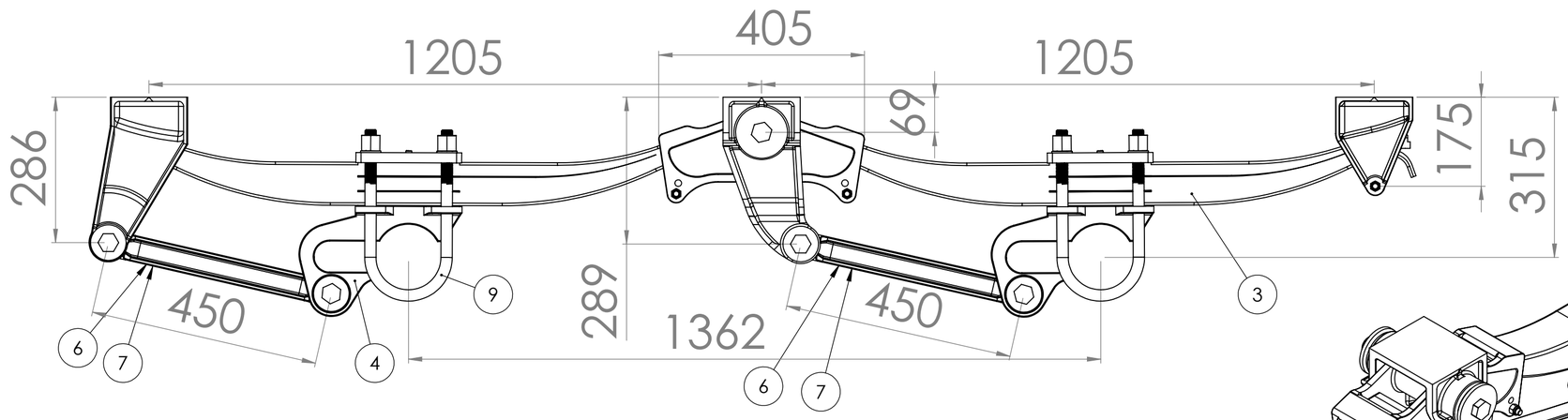

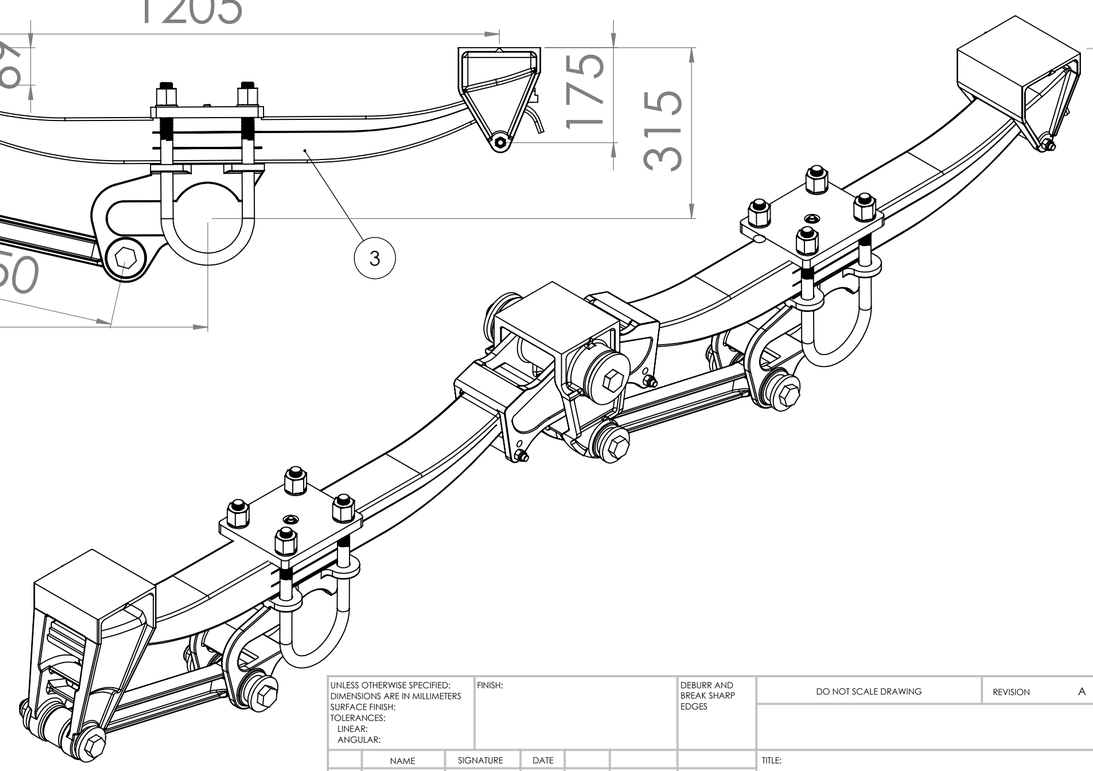

Part No.	Axle Spread	MAXIMUM SUSP. CAPACITY	UNLADEN RIDE HEIGHT	LADEN RIDE HEIGHT	NOTE
97658	1360mm	13000Kg/AXLE	315mm	288mm	BRACING TUBES TO BE FITTED BETWEEN FRONT AND MIDDLE HANGERS (NOT SUPPLIED)

THIS DRAWING IS FOR INFORMATION PURPOSES ONLY AND MAY BE SUBJECT TO CHANGE. ANY VARIATION MUST BE REQUESTED AND APPROVED IN WRITING. THE SPECIFICATION AND INSTALLATION OF THE EQUIPMENT IS SOLEY THE RESPONSIBILITY OF THE INSTALLER. INSTALLATION INSTRUCTIONS, GUIDELINES AND LOAD PRESSURE DIAGRAMS CAN BE FOUND ON OUR WEBSITE WWW.GRANNINGAXLES.IE

UNLESS OTHERWISE SPECIFIED:
DIMENSIONS ARE IN MILLIMETERS
SURFACE FINISH:
TOLERANCES:
LINEAR:
ANGULAR:

FINISH:

DEBURR AND BREAK SHARP EDGES

DO NOT SCALE DRAWING

REVISION A

	NAME	SIGNATURE	DATE
DRAWN	P.SLATOR		8/12/20
CHK'D			
APPV'D			
MFG			
Q.A			

MATERIAL:

WEIGHT:

TITLE:

100MM RH315 TANDEM

DWG NO.

97658

A2

SCALE:1:8

SHEET 1 OF 1